Electronic Laboratory Results Reporting to Public Health

Seth Foldy, MD MPH FAAFP

Director

Public Health Informatics & Technology Program Office (PHITPO)

Clinical Laboratory Improvement Advisory Committee

August 31, 2011

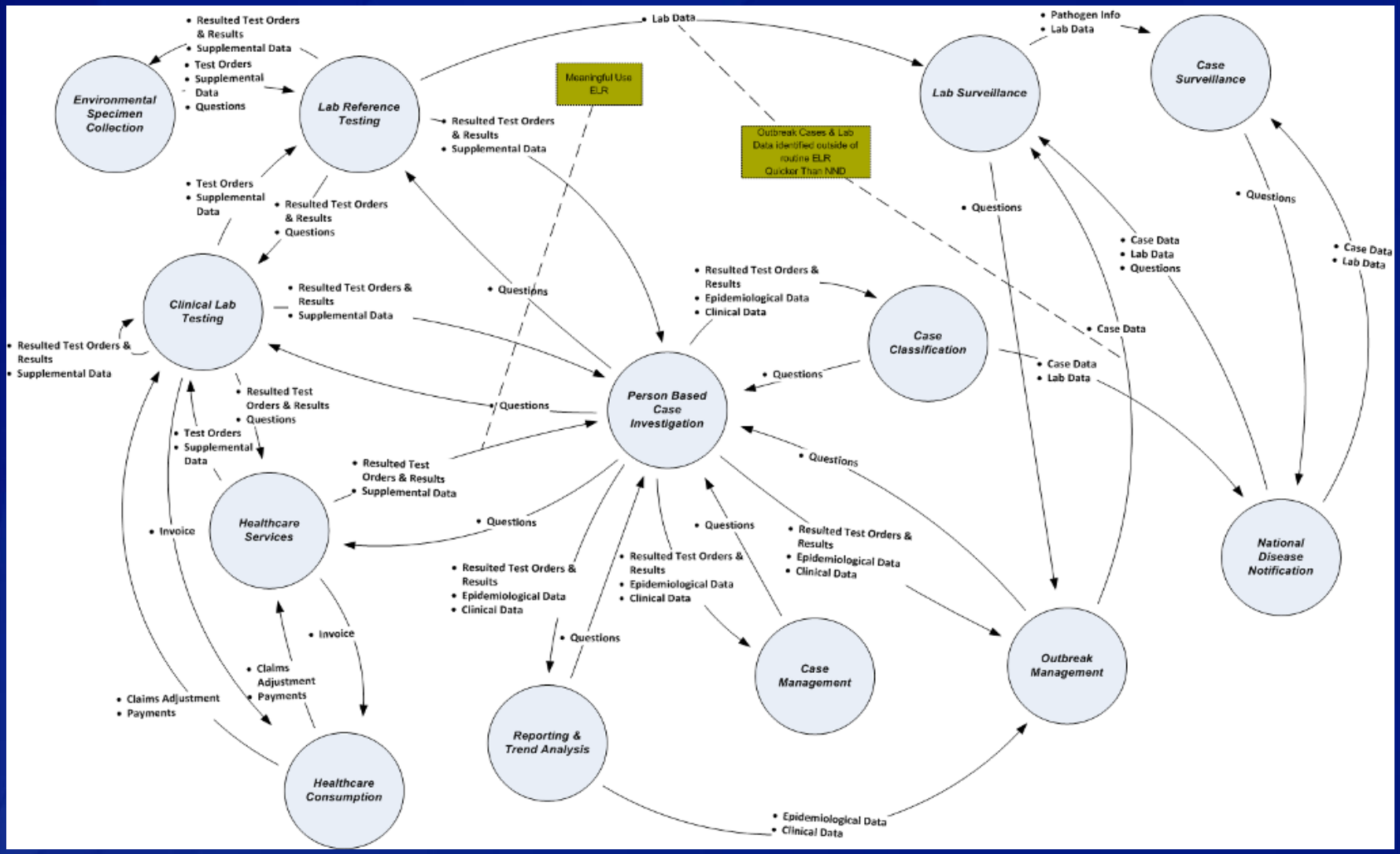
Environmental Specimen Collection
Lab Reference Testing
Lab Surveillance
Case Surveillance
Clinical Lab Testing
Person Based Case Investigation
Case Classification
Healthcare Services
Case Management
Outbreak Management
National Disease Notification
Reporting & Trend Analysis
Healthcare Consumption
Meaningful Use ELR
Outbreak Cases & Lab Data identified outside of routine ELR Quicker Than NND
• Resulted Test Orders & Results
• Supplemental Data
• Test Orders
• Supplemental Data
• Questions
• Lab Data
• Pathogen Info
• Lab Data
• Resulted Test Orders & Results
• Epidemiological Data
• Clinical Data
• Case Data
• Lab Data
• Invoice
• Claims Adjustment
• Payments

Electronic Laboratory Reporting (ELR) Isn't New

- Goals: Speed. Completeness. Efficiency.
- 40 large jurisdictions (states, territories, metro cities) receive ELR today (using an HL7 version 2.3.1 standard implementation guide)-often with PH lab
- Several receive reports from at least some hospitals
- Report what where? State Reportable Condition Assessment: http://www.cste.org/dnn/ProgramsandActivities/PublicHealthInformatics/StateReportableConditionsQueryResults/tabid/261/Default.aspx

Filter Field	Operator	Value(s)	Blank
Region	Equals (Drop Down)	Wisconsin	
DataYear	Equals (Drop Down)	2010	
Condition	Equals (Drop Down)	...	
...	...		

Full Report by State

Wisconsin

Condition ▼	Clinical Authority	Clinical Occupational	Clinical Outbreak	Hospital Authority	Hospital Occupational	Hospital Outbreak	Lab Authority	Lab Occupational
Abdominal wall defects	Explicitly	All Cases	All Cases	Not Reportable	Not Reportable	Not Reportable	Not Reportable	Not Reportable
Acquired Immunodefiency Syndrome (AIDS)/HIV Stage III	Explicitly	All Cases	All Cases	Explicitly	All Cases	All Cases	Explicitly	All Cases
Acute flaccid paralysis	Not Reportable	Not Reportable	Not Reportable	Not Reportable	Not Reportable	Not Reportable	Not Reportable	Not Reportable
Acute upper respiratory illness outbreak	Explicitly	Not Reportable	Aggregate	Explicitly	Not Reportable	Aggregate	Explicitly	Not Reportable
Alcohol-related	Not Reportable	Not Reportable	Not Reportable	Not Reportable	Not Reportable	Not Reportable	Not Reportable	Not Reportable
Amebiasis	Not Reportable	Not Reportable	Not Reportable	Not Reportable	Not Reportable	Not Reportable	Not Reportable	Not Reportable
Anaplasma phagocytophilum infection/Ehrlichiosis, Human Granulocytic (HGE)	Explicitly	All Cases	All Cases	Explicitly	All Cases	All Cases	Explicitly	All Cases
Anaplasmosis (Not	Explicitly	All Cases	All Cases	Explicitly	All Cases	All Cases	Explicitly	All Cases

Meaningful Use

- **CMS Incentives paid to Eligible Hospitals and Eligible Providers that**
  - Adopt a CERTIFIED Electronic Health Record (LIS may be a component of a certified EHR)
  - "Meaningfully use" it to improve health care delivery; coordinate care, empower patients and families; improve privacy and security and support population and public health
- **Progressively harder objectives:**
  - Stage 1 FY 2011-probably 2013) (Hospitals)
  - Stage 2 FY Probably 2014
  - Stage 3 FY 2015-16
- **Payments today, financial penalties later**

ELR and Meaningful Use

- **Stage 1: Eligible Hospitals must test capability to submit one of three types of public health reports**
  - Electronic test results for reportable conditions
  - Syndromic surveillance (utilization of healthcare)
  - Immunizations to immunization registrieds
- **If successful test, begin submitting**
  - "Test and queue" allows public health agencies to on-board new data providers in a logical order with careful validation
  - ELR: must use HL 2.5.1, a relatively new (and little-adopted) messaging standard
- **Now: 21 large jurisdictions report "testing" hospitals; 5 are receiving ongoing submissions, 31 "capable"**

CAP Letter on Meaningful Use Implementation: Examples of Lab Types prone to problems in electronic reporting

- Microbiology
- Blood bank/transfusion medicine
- Molecular pathology and genetic testing
- Interpretive testing that combines numerical results with interpretive text, e.g.,coagulation panel interpretation, and serum protein electrophoresis
- Anatomic pathology, including surgical pathology, autopsy pathology, and cytopathology

http://www.cap.org/apps/docs/advocacy/comments/ehr_temporary_certificate_comments.pdf

CAP Letter on Meaningful Use Implementation: Elements of Results Prone to Suboptimal Handling

- Reference ranges (normal ranges)
- Reflex test orders and results
- Interim reporting and amended results
- Sequential results reported on different dates
- Results that fall into "indeterminate" states between normal and abnormal values
- Misleading report formats
- Corrected result reporting and documentation
- Explanatory footnotes or comments
- Issuance of recent practice guideline or best practice changes and additional observations, interpretations and assessment based on test results, specific patient history and clinical presentations
- Proper identification of name and address of the performing laboratory, particularly in cases where more than one laboratory provides results to the EHR

How can laboratories support hospitals ~~and eligible providers~~ in meeting the public health objectives in Stage 1 of meaningful use, namely the capability to submit electronic data to public health in the context of reportable laboratory results?

- Only an objective for Eligible Hospitals
- Consider LIMS certification by ONC-Authorized Certification & Testing Organizations (ACTO) as a "module" of hospital EHR
- Adhere to implementation guide
- Adhere to vocabulary specifications (local codes- ugh!)
  - LOINC and SNOMED-CT
- Collect needed info (e.g., patient address)

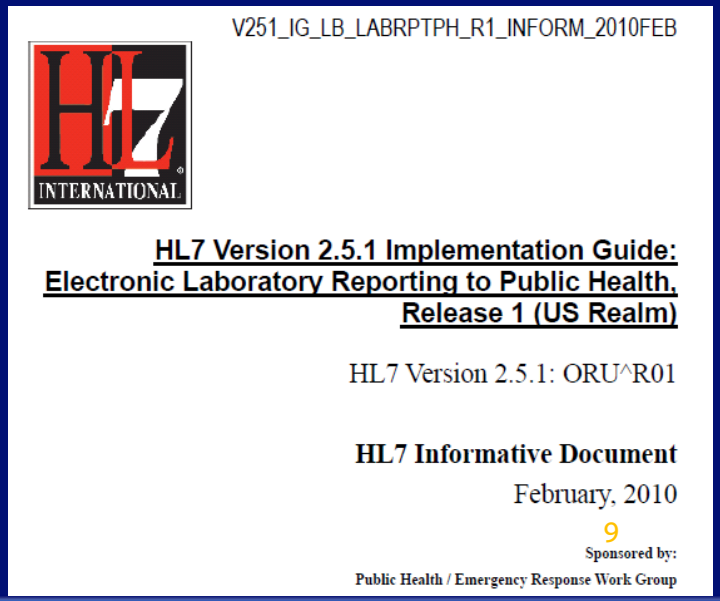
V251_IG_LB_LABRPTPH_R1_INFORM_2010FEB

HL7 INTERNATIONAL

HL7 Version 2.5.1 Implementation Guide: Electronic Laboratory Reporting to Public Health, Release 1 (US Realm)

HL7 Version 2.5.1: ORU^R01

HL7 Informative Document

February, 2010

9

Sponsored by:

Public Health / Emergency Response Work Group

How can laboratories support hospitals ~~and eligible providers~~ in meeting the public health objectives in Stage 1 of meaningful use, namely the capability to submit electronic data to public health in the context of reportable laboratory results?

- **Join the Laboratory Interoperability Coalition (SureScripts/CAP/Amer. Hospital Association)**
  - Test and share best-practices with peers
  - http://www.labinteroperabilitycoop.org/
- **Work with State-designated entities for Health Information Exchange regarding transport**
  - If HIE is ONC-certified it could be used for message translation

What elements of the laboratory report are needed for public health electronic laboratory reporting? Are the result reporting and patient data requirements the same for public health laboratory reporting as they are for EHRs?

- Harmonization performed at ONC Standards and Interoperability Framework Laboratory Results Initiative (http://wiki.siframework.org/)

What issues related to public health electronic laboratory reporting are NOT addressed as part of HITECH Meaningful Use regulations that may need to be addressed in other ways?

- **Facilitate use of correct LOINC codes: include with test-kit printed materials?**
- **Facilitate use of correct LOINC and SNOMED-CT codes for a given condition**
  - Select appropriate items from Reportable Condition Mapping Table (available from http://phinvads.cdc.gov/)
- **Machine-readable logic regarding:**
  - What to report in a jurisdiction
  - What constitutes "a case"
  - How to send
  - The Reportable Condition Knowledge Base" – to be developed
    - http://www.phconnect.org/group/rcmt

V251_IG_LB_LABRPTPH_R1_INFORM_2010FEB

HL7 Version 2.5.1 Implementation Guide: Electronic Laboratory Reporting to Public Health, Release 1 (US Realm)

HL7 Version 2.5.1: ORU^R01

HL7 Informative Document

February, 2010

Sponsored by:

Public Health / Emergency Response Work Group

PHER Work Group Co-chair:	Rita Altamore Washington State Department of Health
PHER Work Group Co-chair:	Alean Kirnak American Immunization Registry Association (AIRA)
PHER Work Group Co-chair:	Joginder Madra Gordon Point Informatics Ltd.
PHER Work Group Co-chair:	Michelle Williamson National Center for Health Statistics/CDC
Principal Author:	Austin Kreisler SAIC - Science Applications International Corp

Questions or comments regarding this document should be directed to Rita Altamore at mailto: rita.altamore@doh.wa.gov.

© 2010 Health Level Seven, International. All rights reserved.

Purpose

- **The HL7 Version 2.5.1 Implementation Guide: Electronic Laboratory Reporting to Public Health (US Realm), Release 1 is the public health version of the HL7 U.S. Realm - Interoperability Specification: Lab Result Message to EHR.**

- **The use case describes the transmission of laboratory-reportable findings to appropriate local, state, territorial and federal health agencies using the HL7 2.5.1 ORU^R01 message.**

- **It includes a reference to batch processing.**

It does not cover:

- Querying patient demographics or querying of laboratory results.
- Reporting of results from laboratory to laboratory.
- Lab to EHR Receiver - HL7 Version 2.5.1 Implementation Guide: Orders and Observations; Interoperable Laboratory Result Reporting to EHR, Release 1

Message Elements Attributes

TABLE 1–1. MESSAGE ELEMENT ATTRIBUTES	
Attribute	**Definition**
Seq	Sequence of the elements as numbered in the HL7 message element. The Seq attribute applies to the data type attribute table and the segment attribute table.
Segment	Three-character code for the segment and the abstract syntax (*e.g.*, the square and curly braces). [XXX] Optional { XXX } Repeating XXX Required [{ XXX }] Optional and Repeating Note that for segment groups there is no segment code present, but the square and curly braces will still be present. The Segment attribute only applies to the Message attribute table.
Length	Maximum length of the element. Lengths are provided only for primitive data types. The length attribute apples to data type attribute tables and segment attribute tables. Lengths should be considered recommendations, not absolutes. The receiver can truncate fields, components and sub-components that are longer than the recommended length. The receiver should continue to process a message even when a field, component, or sub-component length exceeds the maximum recommended length identified in this specification. See section C.3.3 for documentation on how lengths are handled in this guide. The length attribute may contain a character indicating how the data may be truncated by a receiver. The truncation characters are defined as follows: • = Truncation not allowed • # Truncation allowed • No character indicates the truncation behavior is not defined.
DT	Data type used by this profile for HL7 element. The data type attribute applies to data type attribute tables and segment attribute tables.
Usage	Usage of the message element for this profile. Indicates whether the message element (segment, segment group, field, component, or subcomponent) is required, optional, or conditional in the corresponding message element. Usage applies to the message attribute

Usage Conformance Testing

Usage	Recommendation
R – Required	Required elements must be present in a message instance with the following caveats: A required segment, which is contained within a segment group, is required only when the segment group is present in the message. For instance if the segment group is RE, then when the segment group is present, the required segments in that group must be present. A required field in a segment is required only when the segment itself is present in the message. For instance if the segment is CE (conditional or empty) and the conditional predicate is satisfied, then the segment is present in the message and the required fields must be present in the segment. A required component of a data type is required only when the field the data type is associated with is present in the message. Testing of a required element generally involves generating both a fully populated message instance as well as a minimally populated message instance. It may be necessary to generate specific test cases to handle separate segment groups, segments, etc. depending on the usage associated with these higher level elements within a message.
RE – Required, but can be empty	Since conformant senders must be able to show they can send this data, the primary mechanism for testing the RE usage would involve requiring the sender to transmit a "fully" populated message instance from their application. In this case, the expectation is that the message will be generated by the application, not handcrafted. The message would contain all data the sending application can populate in the message. This generally means the sender would be populating in their application all data elements being tested, including those that are optional in the application.
O – Optional	Conformance testing for optional elements would not normally be performed. If a particular implementation decides to use an optional element, it should create an implementation specific profile which further constrains this profile, making the optional element either required, required but may be empty, condition or conditional but may be empty, and then test the element in question based upon the assigned usage in that profile.
C – Conditional	Testing conditional elements generally means a special test case must be developed based upon the specific conditional rule or conditional predicate documented for the element.
CE – Conditional, but may be empty	Testing conditional but may be empty elements generally means a special test case must be developed based upon the specific conditional rule or conditional predicate documented for the element.
X – Not used for this profile	Testing this usage code usually involves looking at both fully populated and minimally populated messages. Note that the sending application may collect the data element in question, but it should not communicate that data element in message instances.

Diagram of HL7 2.5.1 Message Structure (Segments)

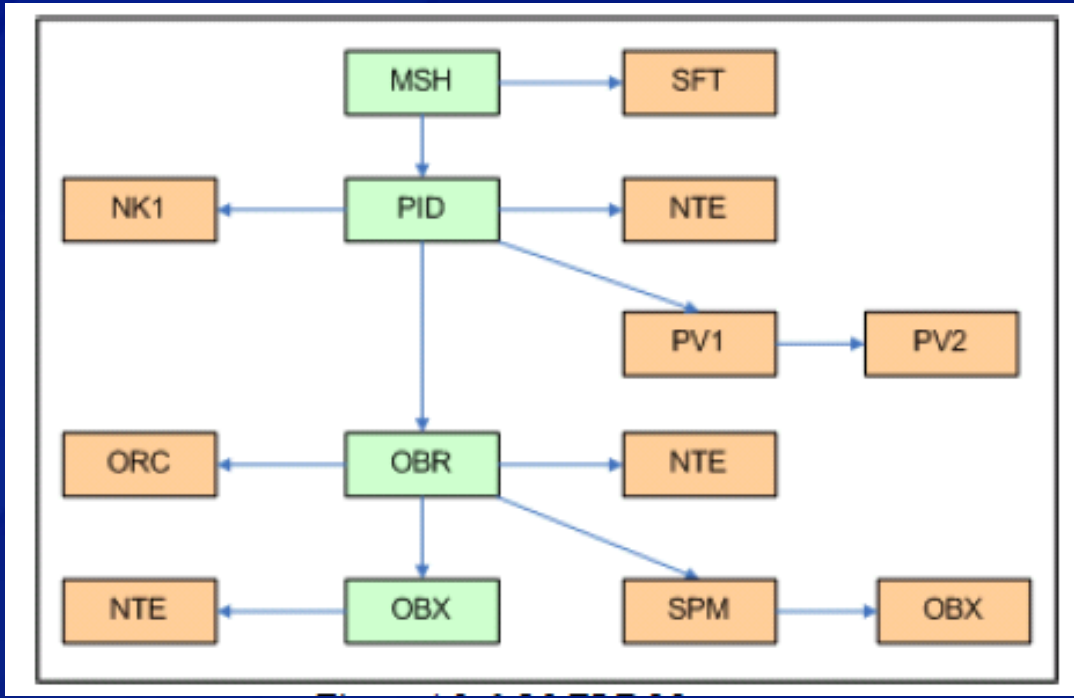

Segment and Field Description

MSH – MESSAGE HEADER SEGMENT

HL7 Element Name	Description/Comments
Field Separator	Character to be used as the field separator for the rest of the message. Literal value: '|' [ASCII (124)].
Encoding Characters	Four characters, always appearing in the same order: |^~\&#|. Literal value: '^~\&#'.
Sending Application	Field that may be used to identify the sending application uniquely for messaging purposes. For this field only, if all three components of the HD are valued, the first component defines a member in the set defined by the second and third components.

Name	
Sending Facility	Field that uniquely identifies the facility associated with the application that plays the Laboratory Result Sender Actor (see section 3.1 Use Case Model) that sends the message. If acknowledgments are in use, this facility will receive any related acknowledgment message. Lab Result Sender Profile: For harmonization across all receiver profiles, use of an OID for this field is recommended. ELR Receiver Profile: For laboratories originating messages, the CLIA identifier is allowed for the Universal ID component of the HD data type. Non-laboratory facilities taking on the Laboratory Result Sender actor role will use an OID for this field.
Receiving Application	Field that may be used to identify the receiving application uniquely for messaging purposes. For this field only, if all three components of the HD are valued, the first component defines a member in the set defined by the second and third components.

Segment and Field Description

MSH – MESSAGE HEADER SEGMENT (cont)

HL7 Element Name	Description/Comments
Receiving Facility	Field that uniquely identifies the facility for the application that plays the Laboratory Result Receiver Actor (see section 3.1 Use Case Model) and receives the message. If acknowledgments are in use, this facility originates any related acknowledgment message.
Date/Time Of Message	Field containing the date/time the message was created by the sending system. Format: YYYYMMDDHHMMSS[.S[S[S[S]]]]+/-ZZZZ. Note that the time zone offset is required, and the minimum granularity is to the second, although more precise time stamps are allowed.
Security	Not supported.
Message Type	For the result message Literal Value: 'ORU^R01^ORU_R01'. For the acknowledgement message Literal Value: 'ACK^R01^ACK'.
Message Control ID	String that uniquely identifies the message instance from the sending application. Example formats for message control IDs include GUID, timestamp plus sequence number, OID plus sequence number or sequence number. The important point is that care must be taken to insure that the message control id is unique. The sending application (MSH-3) plus MSH-10 (message control id) needs to be globally unique.
Processing ID	Field that may be used to indicate the intent for processing the message, such as "T" (training,) "D" (debug,) or "P" (production.)
Version ID	HL7 version number used to interpret format and content of the message. For this message, the version ID will always be Literal Value: 2.5.1. Note that receivers must examine MHS-21 (Message Profile Identifier) to understand which message profile the message instance conforms with.
Sequence Number	

Segment and Field Description

MSH – MESSAGE HEADER SEGMENT (cont)

Continuation Pointer	
Accept Acknowledgment Type	Harmonized condition predicate: Required when MSH-21 profile id is PHLabReport-Ack or USLabReport, otherwise it may be empty or "NE".
Application Acknowledgment Type	Harmonized condition predicate: Required when MSH-21 profile id is PHLabReport-Ack or USLabReport, otherwise it may be empty or "NE". Refer to 6.1.1.2– *HL7 Table 0155 – Accept/Application Acknowledgment Conditions* for valid values.
Country Code	ELR Receiver - If empty the default is 'USA'
Character Set	
Principal Language Of Message	
Alternate Character Set Handling Scheme	

Message Profile Identifier	Field used to reference or assert adherence to a message profile. Message profiles contain detailed explanations of grammar, syntax, and usage for a particular message or set of messages. This field is allowed to repeat. If multiple profiles are listed in this field, it is assumed the profiles aren't contradictory. If they were contradictory, this would be the basis for an error. The rules described by HL7 Chapter 2.1 about constraining profiles apply. The profile ID for the profile defined in this guide should appear as a Repeat. Other profile IDs may appear in the field, as well, in cases where more constrained profiles are created from this profile. An OID for this profile is available once it is assigned. Value is based on profile id from dynamic definition in section 3.3. NHSN Cardinality: The NHSN Profile currently supports a single repeat of this field.

Segment and Field Description

PID – Patient Identification Segment

Patient ID	Deprecated as of *HL7 Version 2.3.1*. See PID-3 Patient Identifier List.
Patient Identifier List	Field used to convey all types of patient/person identifiers. This includes social security numbers, driver's license numbers, medical record numbers, etc. NHSN Cardinality: NHSN currently supports up to 4 patient identifiers.
Patient Name	Patient name or aliases. When the name of the patient is not known, a value must still be placed in this field since the field is required. In that case, HL7 recommends the following: |~^^^^^^U|. The "U" for the name type code in the second name indicates that it is unspecified. Since there may be no name components populated, this means there is no legal name, nor is there an alias. This guide will interpret this sequence to mean there is no patient name. NHSN Cardinality: NHSN currently supports up to 2 patient names.
Mother's Maiden Name	May be included for identification purposes. Name type code is constrained to the value "M."

Date/Time of Birth	Patient's date of birth. The time zone component is optional. Note that the granularity of the birth date may be important. For a newborn, birth date may be known down to the minute, while for adults it may be known only to the date. Birth date may be used by the lab to calculate an age for the patient, which may affect what normal ranges apply to particular test results. Format: YYYY[MM[DD[HH[MM[SS[.S[S[S[S]]]]]]]]][+/-ZZZZ] Note: If a birth date is not provided in the PID, then the patient age at specimen collection must be reported as an observation associated with the specimen.
Administrative Sex	Patient's gender.
Race	One or more codes that broadly refer to the patient's race(s).
Patient Address	NHSN Cardinality: NHSN currently supports a single patient address.

Segment and Field Description

PID – Patient Identification Segment (cont.)

HL7 Element Name	Description/Comments
Phone Number – Home	
Phone Number – Business	
Primary Language	Need language for communication with the patient (i.e., phone, email, letter, etc.)
Marital Status	
Religion	
Patient Account Number	ELR: Use PID-3, with identifier type of 'AN'. NHSN Condition predicate: If PID-3 does not have an identifier with the AN type code, then this field is required and must contain an anonymous (type code = ANON) account number.
Mother's Identifier	
Ethnic Group	NHSN Cardinality: NHSN currently supports a single patient ethnic group.
Birth Place	

Multiple Birth Indicator	
Birth Order	
Citizenship	
Veterans Military Status	

Patient Death Date and Time	Format: YYYY[MM[DD[HH[MM[SS[.S[S[S[S]]]]]]]][+/-ZZZZ]
Patient Death Indicator	If PID-29 is valued, then this field should be populated with "Y" since the patient is known to be dead.
Identity Unknown Indicator	
Identity Reliability Code	
Last Update Date/Time	Note: Used to indicate when demographics were last updated. Format: YYYY[MM[DD[HH[MM[SS[.S[S[S[S]]]]]]]][+/-ZZZZ]

Segment and Field Description

PID – Patient Identification Segment (cont.)

Last Update Facility	This is the facility that originated the demographic update. ELR: Condition predicate: If PID-33 is present this is required.
Species Code	Population of this field supports animal rabies testing as it relates to human rabies testing. This is a variant to HITSP where the field is not supported. If a constrained version of this guide includes support for Breed (PID-36) or Strain (PID-37), then this field would be required if Breed and or Strain is present.
Breed Code	If a constrained version of this guide includes support for Strain (PID-37), then this field would be required if Strain is present. ELR Note: The value set for PID-35, PHVS_Animal_CDC, is drawn from SNOMED CT and includes breed codes as well as codes for the species. SNOMED CT is now structured such that the selection of the specific breed also implies a specific species.
Strain	
Production Class Code	

HL7 Element Name	Description/Comments
Tribal Citizenship	HL7 recommends using Bureau of Indian Affairs (BIA) Tribal Identity List. The following is a link to the current live list: http://www.usa.gov/Government/Tribal_Sites/index.shtml This is a link to the most recent official static list: http://edocket.access.gpo.gov/2008/E8-6968.htm

Segment and Field Description

PV1 – Patient Visit Information

Set ID - PV1	Literal Value: '1'.
Patient Class	A gross identification of the classification of patient's visit
Assigned Patient Location	Lab to EHR Condition predicate: Required if PV1-2 is "inpatient."
Admission Type	Lab to EHR Condition predicate: Required if PV1-2 is "inpatient."
Preadmit Number	
Prior Patient Location	
Attending Doctor	
Referring Doctor	
Consulting Doctor	
Hospital Service	
Temporary Location	
Preadmit Test Indicator	

Admit Source	
Admitting Doctor	
Patient Type	
Visit Number	
Financial Class	

Segment and Field Description

PV1 – Patient Visit Information

Transfer to Bad Debt Date	
Bad Debt Agency Code	
Bad Debt Transfer Amount	
Bad Debt Recovery Amount	
Delete Account Indicator	
Delete Account Date	
Discharge Disposition	Disposition of the patient at discharge or once the visit is completed, for example, "Discharged to Home/Self-Care", "Expired", "Left Against Medical Advice". Uses Uniform Billing codes.
Discharged to Location	
Diet Type	
Servicing Facility	
Bed Status	Not supported
Account Status	
Pending Location	

HL7 Element Name	Description/Comments
Prior Temporary Location	
Admit Date/Time	Date and time patient arrived for services
Discharge Date/Time	Date and time patient services ended ELR and NHSN Cardinality: ELR and NHSN currently support a single discharge date/time.
Current Patient Balance	
Total Charges	
Total Adjustments	
Total Payments	
Alternate Visit ID	
Visit Indicator	
Other Healthcare Provider	

Segment and Field Description

OBR- Observation Request Segment

Set ID - OBR	For the first repeat of the OBR segment, the sequence number shall be one (1), for the second repeat, the sequence number shall be two (2), etc.
Placer Order Number	This identifier is assigned by the placer of the order being fulfilled by this result message. This identifier distinguishes the placer's order from all other orders created by the placer where an order is interpreted to be the testing identified in a single OBR segment. Normally, it is a type of system identifier assigned by the placer software application. The Placer Order Number and the Filler Order Number are essentially foreign keys exchanged between applications for uniquely identifying orders and the associated results across applications.

Filler Order Number	Order number associated with the Filling Application. This number is assigned to the test by the organization performing the test. This field should not contain the accession number or specimen identifier for a specimen unless these identifiers meet the criteria for a filler order number. The specimen or accession identifier should be placed in SPM-2. The Filler Order Number identifies this order as distinct from all other orders being processed by this filler where an order is interpreted to be the testing identified in a single OBR segment. Normally, this is a type of system identifier assigned by the filler software application. The Filler Order Number, along with the Placer Order Number, is essentially foreign keys exchanged between applications for uniquely identifying orders and the associated results across applications. In messages containing multiple OBRs, each OBR must be identified by a unique Filler Order Number. This is critical for making parent/child results relationships work properly. Microbiology cultures and sensitivities are linked in this fashion in this profile. See *Appendix A, Section A.4. Linking Parent and Child Results* of this

Segment and Field Description

OBR- Observation Request Segment (cont.)

Universal Service Identifier	Identifier code for the requested observation/test/ battery. Strongly recommend Laboratory Order Value Set, which is based on LOINC.
Collector Identifier	
Specimen Action Code	
Danger Code	
Relevant Clinical Information	
Ordering Provider	Identifier of the provider who ordered the testing being performed. The National Provider Identifier (NPI) may be used as the identifier. Note that ORC.12 Ordering Provider is constrained to contain the same value as this field.
Observation Date/Time	For specimen-based observations, the date/time the specimen was collected. A minimum of year, month and day must be provided when the actual date/time is known. For unknown collection date/time use "0000". If the SPM is sent, this field must contain the same value as the first component of SPM-17 Specimen Collection Date/Time. HL7 requires this field in an OBR in a result message. For OBXs related to this OBR and related to the testing of a specimen, OBX-14 (Date/Time of the Observation) shall contain the same value as this field. Format: YYYYMMDD[HH[MM[SS[.S[S[S[S]]]]]]]+/-ZZZZ] except when reporting an unknown date of '0000"
Observation End Date/Time	For specimen-based observations where the specimen was collected over a period of time, this represents the end point in time when the specimen was collected. ELR Condition predicate: This field must contain the same value as the second

Segment and Field Description

OBR- Observation Request Segment (cont.)

Order Callback Phone Number	This is the number the laboratory can call with questions regarding the order. This should be a phone number associated with the original order placer. Note that ORC.17 Call Back Phone Number is constrained to contain the same value as this field.
Placer Field 1	
Placer Field 2	
Filler Field 1	
Filler Field 2	
Results Rpt/Status Chng - Date/Time	Required field in this message. Applies to the entire report. Receipt of a subsequent message with the same Filler Number and a different status in this field implies that processing may need to occur at the receiving application level to update a previous report. Format: YYYYMMDDHHMMSS.SS[...]+/-ZZZZ
Charge to Practice	
Diagnostic Serv Sect ID	
Result Status	

Parent Result	Field that, together with OBR-29 Parent, allows this result to be linked to a specific OBX segment associated with another OBR segment. See *Appendix A, Section A.4. Linking Parent and Child Results,* of this document for more information on linking parent/child results. Harmonized condition predicate: This field is required when linking child sensitivities to the parent culture.
Quantity/Timing	Deprecated as of *HL7 Version 2.5*. See TQ1 and TQ2 segments.
Result Copies To	

Segment and Field Description

OBR- Observation Request Segment (cont.)

Parent	Used to link this OBR with a parent OBR. Commonly used with microbiology messages to link a susceptibility result with the parent culture that identified the organism. For this linkage to work properly, the Placer Order Number and the Filler Order Number must uniquely identify the specific parent OBR. This means that the same Filler Number cannot be used to identify multiple OBRs. See *Appendix A, Section A.4. Linking Parent and Child Results*, of this document for more information on linking parent/child results. Harmonized condition predicate: This field is required if OBR-24 carries the value "MB" and OBR-4 indicates the ordered test is a culture and sensitivity. Parent/child linking should be used when the specimen type changes between the parent and child result (specimen and isolate/component specimen) or for reflex tests.

Reason for Study	We know ICD9 is used today, but we will allow ICD10 when the US starts using it.

Assistant Result Interpreter	
Technician	
Transcriptionist	
Scheduled Date/Time	

Procedure Code	
Procedure Code Modifier	
Placer Supplemental Service Information	
Filler Supplemental Service Information	
Medically Necessary Duplicate Procedure Reason	
Result Handling	

Segment and Field Description

OBR- Observation Request Segment (cont.)

Parent Universal Service Identifier	This field has been retained as optional o allow ELR implementations with Labs that do not support unique placer or filler order numbers. In some cases the labs filler order number equates with a requisition number that in conjunction with the Universal Service ID will constitute a unique identifier for the order. For parent/child result linking to work in these situations, the sending lab will need to populate not only OBR-29, but this field also. The receiving application will need to use both OBR-29 and this field to properly link these results. We note that such implementations will not be conformant with this guide, but optional support for this field has been retained so that states may still communicate with these labs in a non-conformant manner.

Segment and Field Description

OBX- Observation Result Segment

Set ID – OBX	For the first repeat of the OBX segment, the sequence number shall be one (1), for the second repeat, the sequence number shall be two (2), etc.
Value Type	This field identifies the data type used for OBX-5. Conditional statement: If OBX-5 is populated, OBX-2 is required. See *Section 5.8.1, HL7 Table 0125* for the data types that will be supported for this field and OBX-5.

Segment and Field Description

OBX- Observation Result Segment

Observation Identifier	Unique identifier for the type of observation. This field provides a code for the type of observation. OBX-3 in conjunction with OBX-4 Observation Sub-ID should uniquely identify this OBX from all other OBXs associated with this OBR. LOINC is used as the coding system for this field except where the test being reported has no equivalent LOINC code. In this case, use of local codes is allowed. This should only occur for new tests that have yet been coded by LOINC. When populating this field with values, this guide does not give preference to the triplet in which the standard (LOINC) code should appear. Lab to EHR - LOINC® is an HL7 approved code system and shall be used for the Observation Identifier as described in the appropriate HITSP Interoperability Specification. Use of LOINC codes for additional tests is strongly encouraged.
Observation Sub-ID	Harmonized condition predicate: Required if there is more than one OBX with the same OBX-3 Observation Identifier associated with the same OBR. Normally, this field is populated with a number, but text values may be used also.

Observation Value	Field that documents each specific, allowed data type. See Section *6.1.1.1, HL7 Table 0125* for the data types that will be supported for this field. Harmonized Condition predicate: Either OBX-5 or OBX-8 (Abnormal flags) must be present in the message except if OBX-11 is 'X", result can not be obtained.
Units	UCUM® is an HL7-approved code system and shall be used for units as described in the appropriate HITSP Interoperability Specification. The UCUM unit of measure for values without a unit of measure is "1". Harmonized Conditional statement: If the data type in OBX 2 is "NM" or "SN" and the OBX-11 observation result status is not 'X' then this field is required.
References Range	Interpretation range that applies to the value reported in OBX-5. It should provide enough information to understand the abnormal flags reported in OBX-8. ELR Note-It is not appropriate to send the reference range for a result in an associated NTE segment. It would be appropriate to send information amplifying the reference range provided in this field in an NTE associated with this OBX.

Segment and Field Description

OBX- Observation Result Segment

Abnormal Flags	Indicator of the normalcy of the result found in OBX-5. Cardinality indicates the possible need for multiple abnormal flags, as in the following example: *Example: Hemoglobin has a normal range of 12-16* *Initial result (reported in a separate ORU message based on testing an earlier specimen): HGB = 15.9 (results normal)* *Current result (in this OBX based on current specimen): HGB = 11.9* *abnormality: (L) below low normal and a (D) significant change down (delta > 3).* In this example, OBX-8 would be set to |*L~D*|. Microbiology example: Ceftazidime susceptibility (LOINC 133-9) value = |<=^1|, units = ug/ml, Abnormal flag = S ELR-Note that this IG is adopting HL70078 form 2.7. NHSN has pre-adopted the CWE data type for this field from 2.7. ELR Condition predicate: Required if OBX-5 is empty the OBX-11 observation result status is not 'X', result cannot be obtained.

Probability	
Nature of Abnormal Test	
Observation Result Status	Status of the observation result.
Effective Date of Reference Range	
User-Defined Access Checks	

Segment and Field Description

OBX- Observation Result Segment (cont.)

Observation	to carry the clinically relevant time of the observation. For specimen-based laboratory reporting, the specimen collection date and time. For observations carried out directly on a patient for instance, such as a blood pressure, the time the observation was performed also happens to be the clinically relevant time of the observation. The date/time the testing was performed should be reported in OBX-19 ELR Condition predicate: For observations related to the testing of a specimen, OBX-14 (Date/Time of the Observation) shall contain specimen collection time and will be the same value as OBR-7 and SPM-17.1. Format: YYYYMMDD[HH[MM[SS[.S[S[S[S]]]]]]]+/-ZZZZ] except when reporting an unknown date of '0000". Note that in the past; OBX-14 was often used to carry the time of testing a specimen, even though HL7 clearly stated it should be the specimen collection date/time in that case. In this IG, the time the testing was performed will be carried in OBX-19, and OBX-14 will be used for its

Producer's Reference	If populated the field must identify the same performing organization as that identified in OBX-23 (Performing Organization Name).
Responsible Observer	
Observation Method	Method of testing by the laboratory. If the LOINC code in OBX-3 is methodless, this field shall be populated. Sometimes the method may be extrapolated from the local test codes. NHSN Cardinality: NHSN supports a single Observation Method.
Equipment Instance Identifier	
Date/Time of the Analysis	Time at which the testing was performed. Note that in the past; OBX-14 was often used to carry the time of testing a specimen, even though HL7 clearly stated it should be the specimen collection date/time in that case. In this IG, the time the testing was performed will be carried in OBX-19, and OBX-14 will be used for its HL7 intended purpose.

Segment and Field Description

OBX- Observation Result Segment (cont.)

Performing Organization Name	The information for producer ID is recorded as an XON data type. For laboratories, this field specifies the laboratory that produced the test result described in this OBX segment. This information supports CLIA regulations in the US. For producing laboratories that are CLIA-certified, the CLIA identifier should be used for the organization identifier (component 10).
Performing Organization Address	Address of the laboratory that actually performed the test when used as a reference laboratory.
Performing Organization Medical Director	Name of the Medical Director of the reference laboratory. Required when OBX-24 indicates the performing lab is in a jurisdiction that requires this information.

For More Information on Meaningful Use:

www.cdc.gov/ehrmeaningfuluse

http://HealthIT.hhs.gov

Meaningfuluse@cdc.gov

For more information please contact Centers for Disease Control and Prevention

1600 Clifton Road NE, Atlanta, GA 30333
Telephone, 1-800-CDC-INFO (232-4636)/TTY: 1-888-232-6348
E-mail: cdcinfo@cdc.gov Web: www.cdc.gov

The findings and conclusions in this report are those of the authors and do not necessarily represent the official position of the Centers for Disease Control and Prevention.